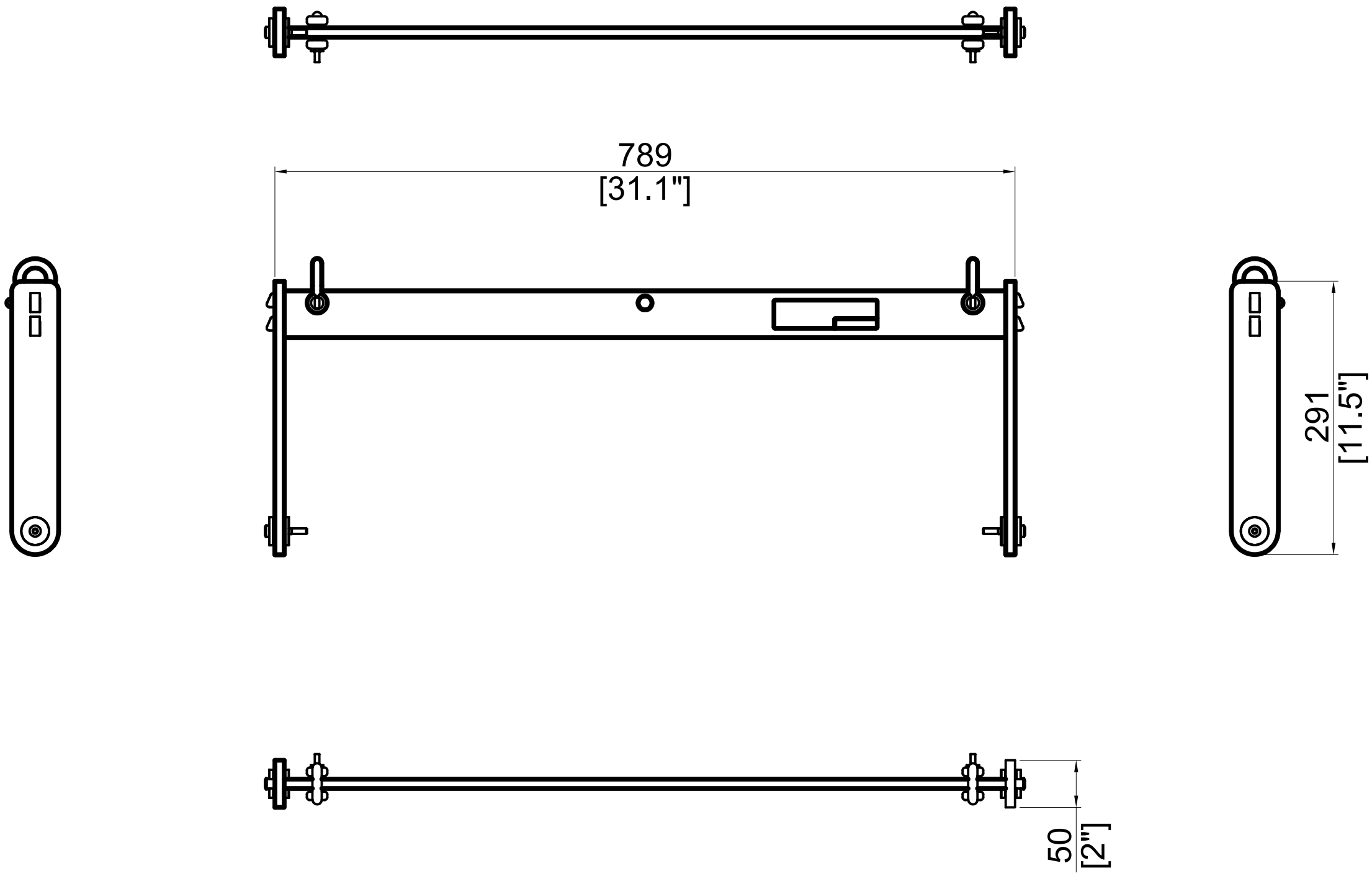

RIGGING ELEMENT

A15i-RIGBAR

3D View

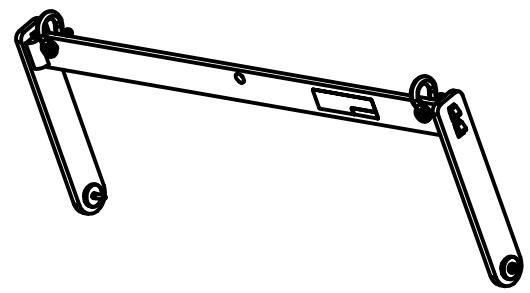

Drawn by:		DAVID.LY	
Date:		2021-11-04	
Scale:	1/5	Dim: mm / inches	
Format:	A3	Weight (Kg/lbs):	5.5 kg / 12.3 lb

Referential axis of symmetry

Rev:	Date:	Modifications:

13 Rue Levacher Cintrat
Parc de la Fontaine de Jouvance
91462 MARCOUSSIS CEDEX
- FRANCE -
Tel: +33 (0)1.69.63.69.63
Fax: +33 (0)1.69.63.69.64
Email: application@l-acoustics.com

These drawing are the property of *L-ACOUSTICS*. All reproduction, copy or communication is forbidden without written permission.